GEKA®

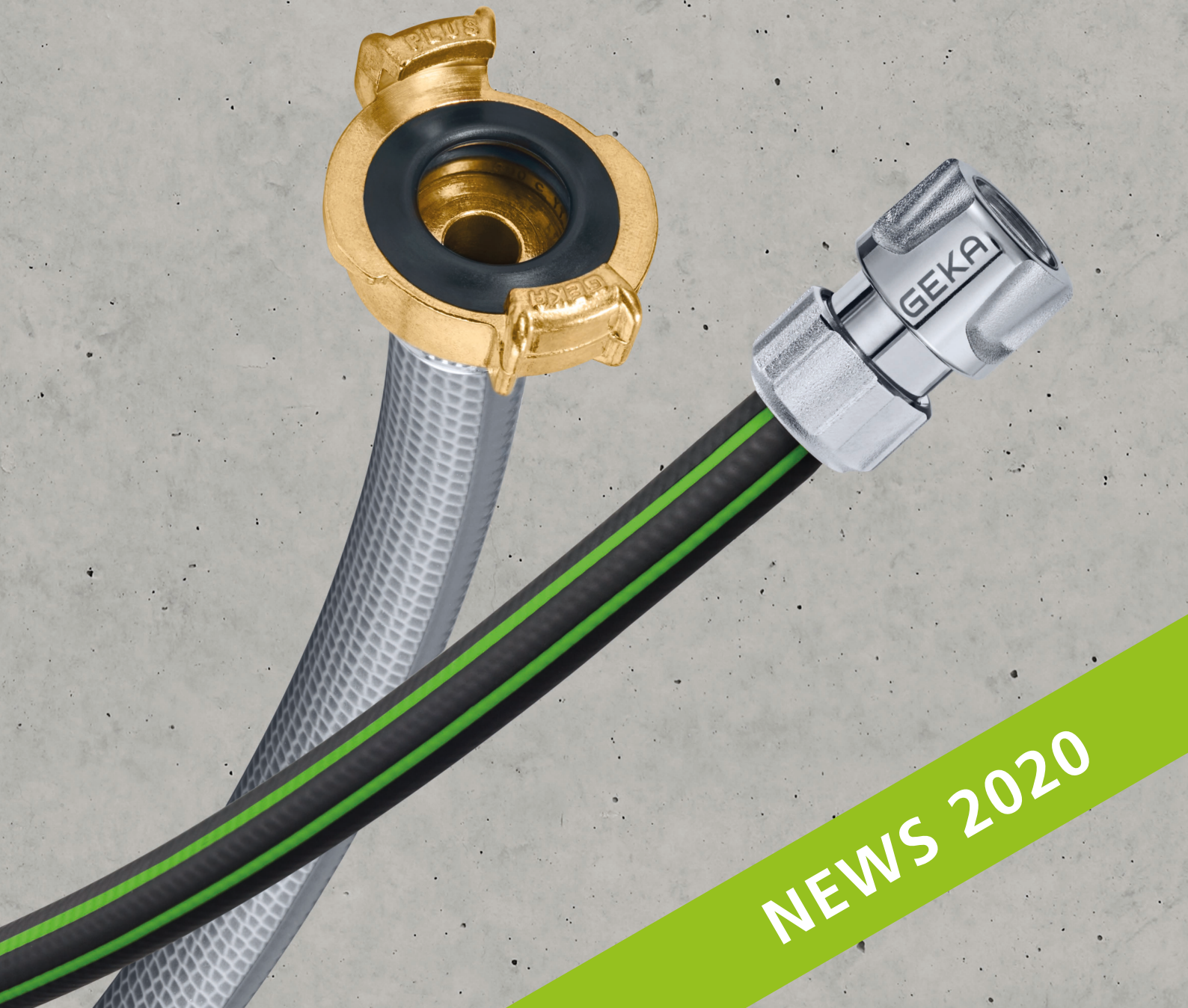

NEWS 2020

Contact us:

For competent advice:		
Export:		
	A / CH / LI	+49 7191 34 52 - 148
	Other export countries	- 118
Service:		
	Technical Support	- 172
	Order Management	- 139
Opening hours:		
	Monday - Friday	7:00am - 12:00pm 1:00pm - 4:00pm
24/7		
		+49 7191 34 52 - 100
		www.geka.de
		info@geka.de
		www.geka-profi-shop.de

Fast and simple ordering:

by FAX: +49 7191 34 52 - 100
by e-Mail: info@geka.de
GEKA® Professional-Shop: www.geka-profi-shop.de

EDI transmission also possible

GEKA® plus hose boxes

GEKA® automatic hose reel K25

Advantage / benefit: ..... **automatic roll up and comfortable unwind** of the hose without knotting
continous adjustment of the hose;
controlled and safe hose-intake
robust metal mount: 180° rotatable;
incl. mounting kit (4x dowel, 4x screws und 4x washers)
with anti-drip feature due to plug on function for intake hose;
fully assembled brass push-fit system;
with useful **hose replace function**;
compact size
including high-quality, robust push-fit system and spray nozzle made of chromed brass

Operating pressure at +20 °C bar:..... 8

Temperature range..... +4 °C to +45 °C

Dimensions LxWxH cm:..... 56,5 (incl. mount) x 24 x 39,5

Accessories: ..... GEKA® plus spray nozzle; GEKA® plus hose piece 1/2‘‘;
GEKA® plus hose piece 1/2‘‘ with water-stop; GEKA® plus tap plug G3/4,
25 m hose + 2 m intake hose

Hose size	**1/2“**
Hose ID mm	12,7
Length approx. m	25
Length approx. m intake hose:	2
Packaging	cardboard box
PU units	1
Item no.	**42.8720.9**

automatic roll-up

continous adjustment

incl. mounting kit and wall mount

intake hose 2 m

with replaceable hose function

incl. push-fit system made of brass

safe and controlled hose-intake

plug on function for intake hose

180° rotatable

GEKA® plus push-fit system

now more robust!

Circular / sector sprinkler multi

4 spray patterns for different watering
throw length adjustable
irrigation of circular surfaces or individually adjustable segments of a circle
series connection of several circular sprinklers thanks to additional connectors
perfect foothold on meadows, fields etc
maximum contact face thanks to round foot
particularly long service life thanks to chromed brass plug
compatible with all customary push fit systems

Sprinkled surface 2 bar max. m²	3 - 201
Sprinkled surface ø at 2 bar m	2 - 16
Sprinkled surface at 4 bar max. m²	7 - 531
Sprinkled surface ø at 4 bar m	3 - 26
Packaging	cardboard box
PU units	1
Item no.	**17.0006.9**

Adjustment of throw length

Adjustment of watering width

Adjustment of spray type

Circular / sector sprinkler V 80 B

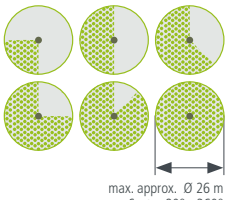

particularly robust swing arm sprinkler made from metal, in professional quality
irrigation of circular surfaces or individually adjustable segments of a circle
regulation of irrigation area and spraying by jet interrupter stud
throw length and elevation angle adjustable via deflector plate
sector limitation infinitely variable
series connection of several circular sprinklers thanks to additional connectors*
perfect foothold on grass or in garden beds, maximum contact face thanks to metal round foot
particularly long service life thanks to chromed brass plug
compatible with all customary push fit systems

Recommended pressure range bar	2 - 4
Throw length at 4 bar approx. m	13
Sprinkled surface Ø at 4 bar m	0 - 26
Sprinkled surface at 4 bar max. m²	0 - 531
Sector limitation from	20°- 360°
Packaging	cardboard box
PU units	1
Item no.	**17.0007.9**

Regulation of spraying and irrigation area

Adjustment of throw length and elevation angle

Sector limitation from 20° - 360°

Robust metal construction

* 3/4" hose required, max. two sprinklers

GEKA® water hoses

GEKA® sprinkler hoses

Advantages / benefits: ..... gentle watering with a fine jet spray,
even water distribution with the 3-channel system;
can be turned over and used as a drip tubing;
delivered with assembly-ready connection system (connectors and cap)
extendable up to 22,5m, resistant against UV light, weather and ozone; algae free, phthalate-free

Material: ..... Hose: PVC
Connectors, cap, threaded hose end fitting: brass

Temperature range:..... ca. -10 °C to +50 °C

Colour:..... green

Area of application:..... very well-suited for crowded front gardens, difficult to reach ground areas and sensitive plants

Packaging: ..... with a cardboard display disc and EAN code

Length approx. m	7,5	15
Water throughput at 3 bar l/min	13	13
Watering surface	approx. 7,5m x 3,6m (approx. 27m²)	approx. 15m x 3,6m (approx. 54m²)
PU units	1	1
Item no.	**16.0000.9**	**16.0001.9**

GEKA® plus push-fit system

GEKA® plus hose piece with ball valve

Continuously variable regulation and water cut-off
Application at hose end: easy swapping of devices, specially under pressure

Hose IW mm	13	13
Hose size	**1/2"**	**1/2"**
Packaging	card	EAN
PU units	5	5
Item no.	**46.0851.8**	**46.0851.9**

GEKA® plus design water taps

Design water tap with GEKA® plus connector plug
For use with all customary push-fit systems

Male thread at inlet mm	20,95	20,95	26,44	26,44
Male thread at inlet	**G1/2**	**G1/2**	**G3/4**	**G3/4**
Packaging		card		card
PU units	1	5	1	5
Covering box unit	30		30	
Item no.	**46.8121**	**46.8121.8**	**46.8123**	**46.8123.8**

GEKA® plus push-fit system drinking water

For drinking water

Advantages / benefits: ..... Quick and convenient: The GEKA® plus plug system with drinking water certification for using drinking water of the highest hygiene standards
Fulfils the criteria of the German Drinking Water Ordinance and meets the requirements of DVGW (German Technical and Scientific Association for Gas and Water) test specification VP550 with DVGW type approval certificate; registration number: DW-0310CQ0490
Incredibly smooth connection with no more than a single click
The individual components can be easily combined with all standard push-fit connectors and hose types
Extremely durable and particularly robust as a result of high-quality brass workmanship

Material: ..... CW617N brass, DIN 17660 and 50930/6

Sealing: ..... Seal rings and O-rings for drinking water with KTW (German water regulations advisory scheme) approval under D2 and DVGW test certificate W270 for hygienic drinking water

Area of application: ..... Mobile food and drink stalls, mobile shops, market stalls, caravans and camping, marinas and fruit and organic cultivation

Please note: ..... To ensure the best possible quality of drinking water, always combine the GEKA® plus plug system certified for drinking water with hoses approved for drinking water
All components should be protected from impurities at all times and installed in such a way that they fit neatly
To ensure optimum drinking water quality, short connections and as narrow as possible widths should be used in order to reduce the time drinking water is retained in the hose, thereby avoiding excessive heating of the drinking water.

That's new: ..... All new 1/2" und 3/4" -components have an modified hose bonding, which is especially for fixing hard hoses permanently without any problems.
For integration with tools additional spanner flats prevent tool sliding.

Approved for the following drinking water hoses:
Conti Aquapal, Conti Festival, Hozelock Profiline Aqua Plus, Semperit Aqualine LMW, Fitt Lilie native, Rehau Rauaqua

GEKA® plus hose pieces drinking water

with improved hose bonding!*

The hose piece is connected with a simple click and detached again by gently pulling back the moveable part

Hose IW mm	13	13	16
Hose size	**1/2"**	**1/2"**	**5/8"**
Packaging	card	EAN	card
PU units	5	5	5
Catalogue no.	801KY	801KSB	802KY
Item no.	**46.1812.8**	**46.1812.9**	**46.1813.8**

Hose IW mm	16	19	19
Hose size	**5/8"**	**3/4"**	**3/4"**
Packaging	EAN	card	EAN
PU units	5	5	5
Catalogue no.	802KSB	803KY	803KSB
Item no.	**46.1813.9**	**46.1814.8**	**46.1814.9**

GEKA® plus hose pieces drinking water with water-stop

with improved hose bonding!*

The hose piece with water-stop allows hoses to be reinserted without turning off the tap because it stops the water in the hose as soon as it is no longer connected

Hose IW mm	13	13	16
Hose size	**1/2"**	**1/2"**	**5/8"**
Packaging	card	EAN	card
PU units	5	5	5
Catalogue no.	841KY	841KSB	842KY
Item no.	**46.1815.8**	**46.1815.9**	**46.1816.8**

Hose IW mm	16	19	19
Hose size	**5/8"**	**3/4"**	**3/4"**
Packaging	EAN	card	EAN
PU units	5	5	5
Catalogue no.	842KSB	843KY	843KSB
Item no.	**46.1816.9**	**46.1817.8**	**46.1817.9**

*only available with 1/2" und 3/4" versions, recognizable by the light red hose clamp

GEKA® plus adapters

Advantages / benefits: ..... Adapter solution to connect the proved GEKA® plus claw-coupling with the GEKA® plus push fit system
can be combined with all customary push fit systems and hose types
unmatched long service life and easy to operate

Area of application: ..... For garden, house, workshop etc. The GEKA® plus adapter drinking water is for use on festivals, on boats and in caravans.

GEKA® plus push-fit adapter

to connect hose with claw coupling and device with GEKA® plus push fit connector

PU unit	5	5
Item no.	**46.0890.8**	**46.0890.9**

GEKA® plus push-fit adapter

to connect water tap with claw coupling and hose with GEKA® plus push fit system

PU unit	5	5
Item no.	**46.0891.8**	**46.0891.9**

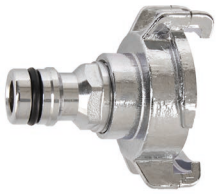

GEKA® plus push-fit adapter drinking water

to connect water tap with claw coupling and hose with GEKA® plus push fit system

PU unit	5	5
Item no.	**46.1891.8**	**46.1891.9**

GEKA® construction hose set

Advantage / benefit: ..... completely assembled with GEKA® quick couplings

Material: ..... Material inclusion: galvanised steel wire with plastic collar;
outer material: high-strength synthetic fibres (polyester);
inner material: TPR rubber-PVC compound
quick coupling: brass

Temperature range: ..... up to +25 °C

Colour: ..... white

Construction hose with GEKA® quick couplings

Hose size	**1¼"**	**1½"**
Hose ID mm	32	40
Connection	GEKA® quick coupling	
Length ca. m	15	15
Operating pressure bar	10	10
PU units	1	1
Item no.	**13.5050**	**13.5051**

Circular sprinkler

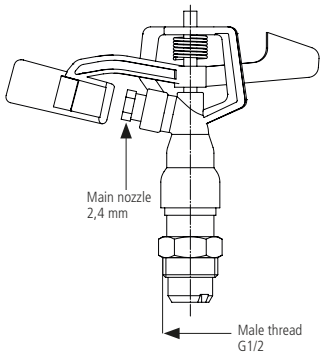

Circular sprinkler V 25 L flat angle

Advantage / benefit: ... **nozzle with flat angle (15°), maximum jet height 1,5 m**
suitable for low pressures and water flow rates
good area covering with only one jet by light pulverization

Material: ..... brass, bronze, stainless steel

Requirements: ..... 1/2"-hose and minimum pressure of 1,7 bar

Area of application: .... for small and medium sprinkling densitie

Field of application: .... **in gardens and for seeds with low water requirement, ideal for sprinkling under trees or at strong wind**

Connection male thread mm	20,95
Connection male thread	**G1/2**
Water throughput at 2 bar l/min	18
Water throughput at 3 bar l/min	21
Water throughput at 4 bar l/min	24
Throw length at 4 bar approx. m	13 (standard nozzle equipment)
HD main nozzle, nozzle bore Ø mm	2,4
Recommended pressure range bar	1,7 - 4,5
PU units	1
Covering box units	100
Item no.	**57.5666.9**

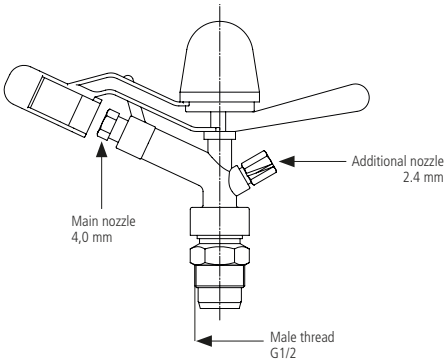

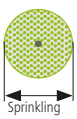

Circular sprinkler V 33 AF anti frost

Advantage / benefit: ... **especially suitable for anti frost sprinkling, main nozzle with high angle (25°), maximum jet height 3,7 m**

Material: ..... brass, stainless steel

Requirements: ..... 3/4"-hose and minimum pressure of 2,5 bar

Field of application: .... **perfect for frost protection specially of fruit trees due to large jet height**

Connection male thread mm	26,44
Connection male thread	**G3/4**
Water throughput at 2 bar l/min	19
Water throughput at 3 bar l/min	24
Water throughput at 4 bar l/min	28
Throw length at 4 bar approx. m	13,5 (standard nozzle equipment)
HD main nozzle, nozzle bore Ø mm	4,0
ZD additional nozzle, nozzle bore Ø mm	2,4
Recommended pressure range bar	2,5 - 6,5
PU units	1
Covering box units	50
Item no.	**57.5667.9**

GEKA® plus hose reels

GEKA® plus automatic hose reel PA20 and PA20SK

Advantages / benefits: ..... **sturdy, powder-coated steel construction**
automatic roll up of the hose with hose protecting hose guide
gradual adjustment from the distance possible by pulling the hose
fully assembled and ready to use
optimal water throughput for hoses up to 3/4“
with hose protection and hose stop
with GEKA® plus 90° angled rotary fitting, brass
hose guide adjustable in 45° steps
42.9010.9 with 20m GEKA® plus water hose 110 3/4“, high-quality, robust quick couplings and spray nozzle made of brass + 2m supply hose

Material: ..... frame: powder-coated steel; hose guide: white plastic,
hose stop: black rubber; coil spring, hose protector: stainless steel;
GEKA® plus angled rotary fitting: brass

Operating pressure: ..... approx. 20 bar

Temperature range: ..... +4 to +60°C (depending on the type of hose)

Dimensions cm: ..... 52,5 x 50,5 x 21

Please note: ..... hose reel is designed for hoses with an outside diameter of 24 mm
screws and wall plugs for wall mounting are not included
rotatable wall mount 90° including connection screws (42.9099.9) available separately as accessory

PA20 - 42.9000.9

PA20SK - 42.9010.9

Connection	Male thread	GEKA® plus quick coupling	
Male thread mm	33,25		
Male thread	**G1**		
Capacity 1/2“-hose approx. m	25	25	
Capacity 5/8“-hose approx. m	25	25	
Capacity 3/4“-hose approx. m	20	20	
Net weight approx. kg	15	24	2
PU units	1	1	1
Item no.	**42.9000.9**	**42.9010.9**	**42.9099.9**

wall mount
42.9099.9

sturdy steel construction

GEKA® plus angled rotary fitting with full 3/4” water flow

gradual adjustment

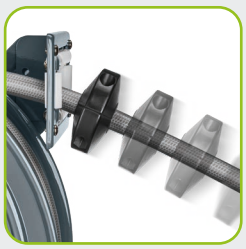

automatic roll-up of the hose

adjustment controllable by pulling the hose at its end

hose protecting hose guide

GEKA® plus hose trolleys

GEKA® plus hose trolley P25 and P25SST

Advantages / benefits: ..... **sturdy, powder-coated steel construction**
easy & convenient handling, ergonomic height
optimized frame design for guaranteed stability and easy rolling
gripping solid rubber tyres for comfortable rolling
convenient accessory rack to hold a nozzle
tool-free assembly and disassembly of the handle for quick and easy storage during the winter season
can be set up quickly and easily without the need of special tools
with GEKA® plus push fit connector inside and outside
42.8506.9 with 25m GEKA® plus water hose 110 1/2", high-quality, robust push-fit connector system and spray nozzle made of brass + 1,5m supply hose

Material: ..... frame: powder-coated steel; grip, tyres: black rubber;
accessory rack and crank handle: green plastic; intake tube: stainless steel
GEKA® plus push-fit connectors: chromed brass

Temperature range: ..... +4 to +60°C (depending on the type of hose)

Dimensions cm: ..... 41 x 99 x 39

Please note: ..... pre-assembled; spare parts available on demand

Connection	GEKA® plus push-fit connectors	
Capacity 1/2"-hose approx. m	50	50
Capacity 5/8"-hose approx. m	40	40
Capacity 3/4"-hose approx. m	25	25
Net weight approx. kg	7	12
PU units	1	1
Item no.	**42.8501.9**	**42.8506.9**

P25 - 42.8501.9 P25SST - 42.8506.9

sturdy steel construction

convenient accessory rack to hold a nozzle

gripping solid rubber tyres for comfortable rolling

easy and tool-free assembly

ready for use with GEKA® plus push-fit connector

Spare parts for hose trolleys

Spare parts for GEKA® plus hose trolley P25 und P25SST

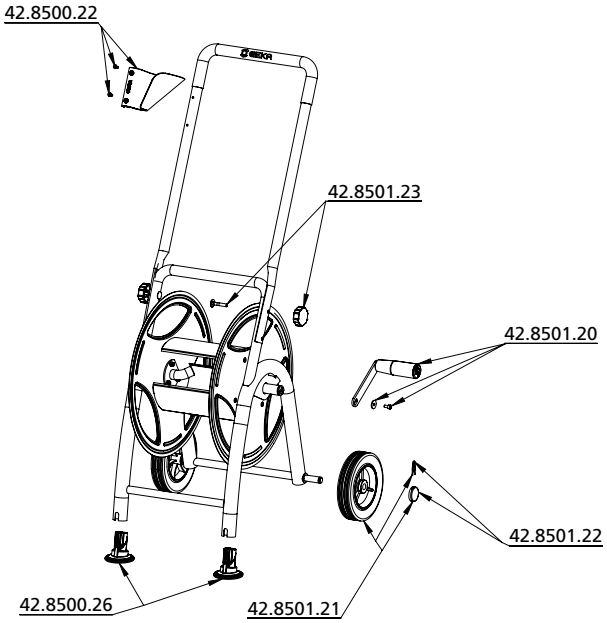

for Item no.	42.8501.9, 42.8506.9

Item no.	Denomination
42.8501.20	Crank set
42.8501.21	Wheel 148x38 with wheel fastening
42.8501.22	Wheel fastening, 2 pieces
42.8501.23	Handle fastening, 2 pieces
42.8500.22	Accessory rack plastic
42.8500.26	Toes, 2 pieces

Spare parts for hose reels

Spare parts for GEKA® plus hose reel PA20 and PA20SK

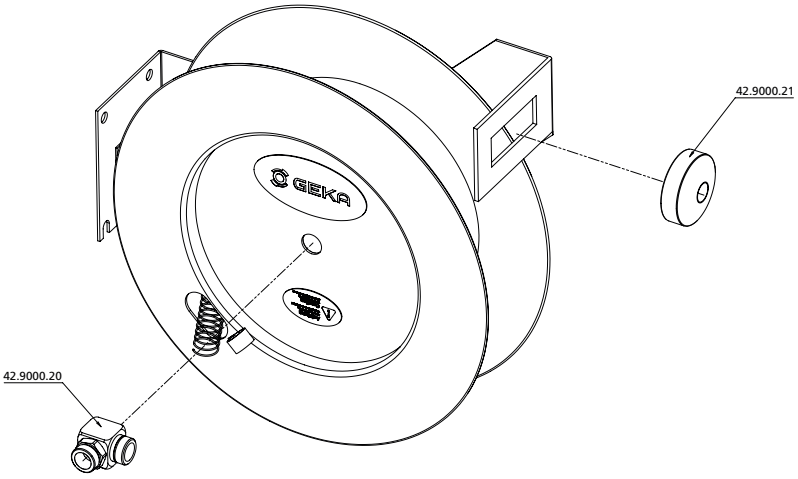

for Item no.	42.9000.9

Item no.	Description
42.9000.20	Angled rotary fitting 90° 1“
42.9000.21	Hose stop for 3/4“ hoses

GEKA® plus soft rain classic plus

Watering head with replaceable plate

Watering head with bayonet fitting

Now with light aluminium valve!

GEKA® plus soft rain classic plus

Advantages / Benefits:..... **Robust watering device** with practical ball valve for one-handed operation and comfortable, non-slip handle
Individually positioned lever
Handle with **soft grip cover** provides thermal insulation and **protects hands against cold water flow**
Watering head for large, soft water spray with replaceable plate and protection ring
High water flow, thus ideal for professional use
Dirt filter prevents deposits
Bayonet fitting makes changing the watering head easy with just a click
compatible with all GEKA® plus watering and spray heads with bayonet fitting and comes with watering head (50.5433.9) in size M with fine water spray and replaceable plate

Material: ..... Watering head, outlet pipe and union nut: light metal;
Plate: stainless steel; Protection ring: EPDM;
Handle: plastic made from PA and TPE;
Ball valve: aluminium chromed;
Bayonet catch, quick coupling: brass;
Push-fit connector (50.5409.9): chrome plated brass

Colour:..... Handle: dark grey, grey; toggle: dark grey;
Protection ring: dark grey

Connection: ..... GEKA® plus quick coupling suitable for hose sizes from 3/8“ to 1 1/2“, 50.5409.9 with GEKA® plus push fit connector

Options:..... Large Selection of GEKA® plus watering and spray heads with bayonet fitting

Connection	GEKA® plus quick coupling					GEKA® plus push fit connector
Water flow at 3 bar l/min	92	92	92	92	92	62
Sieve hole Ø in mm	0,7	0,7	0,7	0,7	0,7	0,7
Pipe Ø in mm	19 x 1	19 x 1	19 x 1	19 x 1	19 x 1	19 x 1
Pipe bend	35°	35°	35°	35°	35°	35°
Pipe length in cm	20	40	60	90	120	60
PU unit	1	1	1	1	1	1
Item no.	**50.5466.9**	**50.5405.9**	**50.5406.9**	**50.5407.9**	**50.5408.9**	**50.5409.9**

Bayonet fitting makes changing the watering head easy with just a click

Handle with soft grip cover

50.5409.9: mit GEKA® plus connector

Plate which makes it easy to clean or change

Rubber protection ring to protect your product from damage

Dirt filter prevents deposits

GEKA® plus soft rain vario plus

Watering head with replaceable plate

Watering head with bayonet fitting

GEKA® plus soft rain vario plus

Advantages / Benefits:..... **Robust watering device with rotatable and replaceable telescopic outlet pipe** and practical ball valve with handle
Handle with **soft grip cover** provides thermal insulation
Watering head for large, soft water spray with replaceable plate and protection ring
High water flow, thus ideal for professional use
Dirt filter prevents deposits
Bayonet fitting makes changing the watering head easy with just a click
Compatible with all GEKA® plus watering and spray heads with bayonet fitting
With watering head (50.5443.9) in size M with fine water spray

Material: ..... Watering head, telescopic outlet pipe and union nut: light metal;
Plate: stainless steel; Protection ring: EPDM; Handle: plastic made from PA and TPE;
Handle at outlet pipe: TPE; Bayonet catch, quick coupling: brass;
Ball valve: aluminium chromed; Toggle: stainless steel, with plastic coating

Colour:..... Handle: dark grey, grey; toggle is dark grey; Protection ring: dark grey

Connection: ..... GEKA® plus quick coupling suitable for hose sizes from 3/8" to 1 1/2"

Options: ..... Large selection of GEKA® plus watering and spray heads with bayonet fitting

Application: ..... Highly recommended for watering inaccessible wall, balcony, hanging, land, roadside and hillside vegetation

Now with light aluminium valve!

Water flow at 3 bar l/min	92	92
Sieve hole Ø in mm	0.7	0.7
Pipe Ø in mm	20 x 1.25 + 17 x 1.5	20 x 1.25 + 17 x 1.5
Pipe bend	35°	35°
Pipe length in cm	80-140	145-225
PU unit	1	1
Item no.	**50.5415.9**	**50.5416.9**

Water flow at 3 bar l/min	92	92
Sieve hole Ø in mm	0.7	0.7
Pipe Ø in mm	20 x 1.25 + 17 x 1.5	20 x 1.25 + 17 x 1.5
Pipe bend	135°	135°
Pipe length in cm	145-225	240-400
PU unit	1	1
Item no.	**50.5417.9**	**50.5418.9**

Bayonet fitting makes changing the watering head easy with just a click

Handle with soft grip cover

Plate which makes it easy to clean or change

Dirt filter prevents deposits

50.5415.9 50.5416.9 50.5417.9 50.5418.9

Single parts for GEKA® plus watering devices

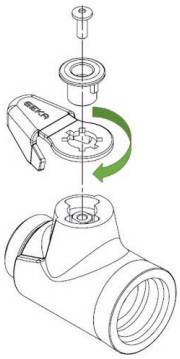

Individually positionable lever

GEKA® plus ball valve soft rain chromed aluminium

Advantage / benefit: ..... **Ball valve with practical lever for one-handed operation**
Individually positionable lever
High water flow, thus ideal for professional use
with flat seal ring for reliable sealing
Compatible with all GEKA® plus outlet pipes soft rain and GEKA® plus threaded fittings soft rain (50.5427.9, 50.5460.9), as well as the GEKA® plus push fit connector soft rain (50.5428.9)

Material: ..... Housing: chromed aluminium;
Ball: hard chromed brass with PTFE seals; Spindle: brass with NBR sealing ring; Toggle and fixing screw: stainless steel; toggle with plastic coating

Max. operating pressure:..... max. 20 bar

Seal:..... Ball with PTFE seals; spindle with NBR sealing ring

Colour:..... Toggle is dark grey

Female thread in mm	24,66
Female thread	**G3/4**
Male thread in mm	26,44
Male thread	**G3/4**
Nominal size in mm	13
Nominal size	**1/2"**
Length approx. in mm	60
Weight in g	**149**
PU unit	1
Item no.	**50.5459.9**

GEKA® Promotions 2020

We support you in marketing

In 2020 we also use persuasive and effective marketing solutions to ensure that GEKA® products are optimally presented at your point of sale. All advertising materials have one thing in common: targeted and uniform adress of quality-conscious customers.

P25SST Pallet

Quantity	Item no.	Description
1x	**42.8541**	Pallet with 6 hose trolleys P25SST

P25 Pallet

Quantity	Item no.	Description
1x	**42.8540**	Pallet with 11 hose trolleys P25

Watering wand light rack shape Z

Quantity	Item no.	Description
1x	**99.1125**	Rack shape Z incl. hooks
12x	**50.5455.9**	watering wand light 60 cm
12x	**50.5456.9**	watering wand light 20 cm

Watering wand light rack shape U

Quantity	Item no.	Description
1x	**99.1126**	Rack shape U
1x	**99.1128**	3er hooks
1x	**99.1129**	4er hooks
12x	**50.5455.9**	watering wand light 60 cm
12x	**50.5456.9**	watering wand light 20 cm

We can do even more for you!

We are offering an individual area module adapted to your space situation.
We design the layout for you and customise it to your needs.

Contact us –
Your personal contact partner will be happy to assist you.

KARASTO Armaturenfabrik Oehler GmbH
Manfred-von-Ardenne-Allee 27
71522 Backnang | Germany

+49 7191 34 52 - 0
+49 7191 34 52 - 100
info@geka.de
www.geka.de/en

The brand GEKA® is a registered trademark of the company KARASTO Armaturenfabrik Oehler GmbH, Germany.

© 01/2020 GEKA® Art.-Nr. 99.0049